NOTE ON ANTENNAE RESISTANCE.

R. R. Ramsey.

Attention is called to the fact that in the modern oscillating receiving circuits using telephones as current indicators the "half deflection method" of resistance measurements will not give correct results.

A LONG WAVE RECEIVER.

R. R. Ramsey.

In wireless work all wave lengths are used from 200 meters or less, amatures, to 20,000 meters in transcontinental transmission. It is customary to limit the wave length range of reception of any receiver to a comparative small band of this range. This is due to the fact that in order to keep the natural frequency of the coil high, which involves the necessity of the distributed capacity of the coil being low, it is usual to wind the coils with one layer of wire. Single layer coils in order to have a high inductance must be made of large dimentions of very fine wire which necessitates a very large resistance.

In the coil which I have made I have endeavored to avoid this difficulty by winding the coils of relatively large wire in banks or coils one inch in width and five layers deep. The distributed capacity is kept to a low value by separating each layer by means of heavy card board. The coils are wound on card board tubes whose length is seven inches and whose diameters are, primary coil 14 cm. and secondary coil 10 cm. Each coil consists of six banks one inch wide, five layers deep. Each layer containing twenty turns of No. 20 wire. The total number of turns per coil is 600. The original design of the coil called for No. 24 wire 30 turns per inch or about 1.000 turns in all. This would give an inductance of about .07 henrys or a wave length of about 20,000 meters using an ordinary .001 microfarad condensed. The smaller wire was not available so the larger wire was used and the lack of inductance was made up by using a variable condenser whose maximum capacity is .01 microfarads.

On the secondary coil ten taps are brought out. The taps are arranged as follows. Tap No. 1 contains 1 turn; 2, 3 turns; 3, 7 turns; 4, 15 turns; 5, 1 layer; 6, 2 layers; 7, 1 bank; 8, 2 banks; 9, 4 banks; 10, the entire secondary coil. Cut out or dead end switches are inserted between taps No. 6 and 7, and taps 8 and 9. The windings of the primary are arranged after the same plan as that in the secondary except that there are 8 taps instead of 10. The coils are mounted so that the secondary will slide into the primary coil according to the well known plan of the slide tuner. A feed back or regenerative coil of 425 turns of No. 30 wire is mounted so as to slide into the primary coil from the opposite end from the secondary coil. This coil is seldom used as it is found that an "auto feed back" connection on the secondary gives better results. This consists of a switch by means of which the filament of the tube can be connected to a point near the middle of the secondary coil. The diagramatic connections are shown in figure 1.

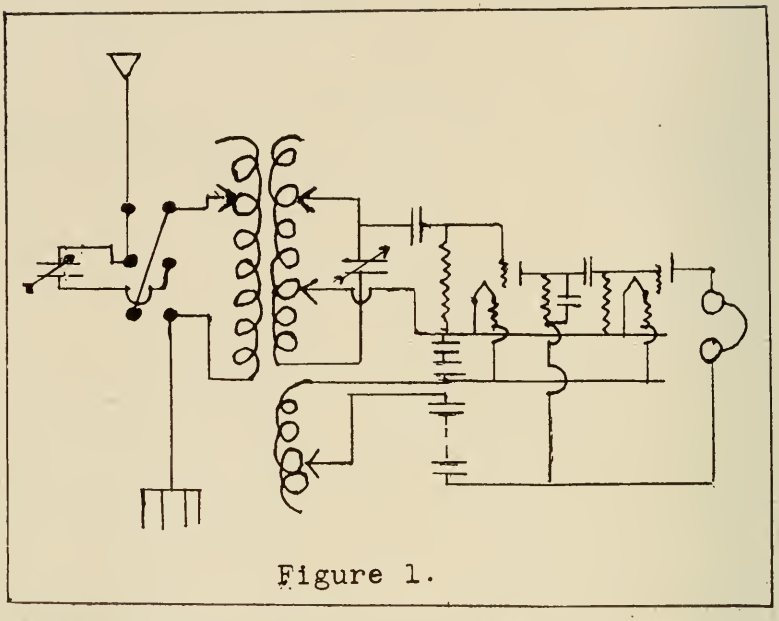

Figure 1.

The tuning of the primary coil is by means of a variable condenser in series or in multiple with all or a portion of the primary coil.

The inductance of the coils as wound is secondary, .0185 henry; and primary, .0228 henry. The total resistances are, 8.1 ohms and 9 ohms respectively. The natural wave length of the entire secondary coil as measured with a wave meter is 1100 meters, which corresponds to a distributed capacity pf .000019 microfarads. The dead end switches break this so that the energy absorbed is a minimum.

As mounted as a slide tuner the length over all is 22 inches. The total weight is 15 pounds. An equivalent long wave receiver coil of the single layer type would require five times as much wire and would be 25 times as long or a length of about 45 feet.

Thus we have in small dimensions a receiver for any wave length from Annapolis 17000 meters to amateur stations 200 meters. European stations are received with one bulb using an aerial 125 feet long stretched among the trees of the Indiana University campus.