STUDIES IN ETHERIFICATION

I. THE PREPARATION OF SOME HIGHER ALIPHATIC ETHERS WITH SULFURIC ACID

G. F. HENNION, H. D. HINTON and J. A. NIEUWLAND,
University of Notre Dame

Pure ethers of some of the higher aliphatic alcohols are not, as yet, commercially obtainable products. Needing several of these compounds in our research, a study of the literature was made in an attempt to find a generally satisfactory method of preparation. Of the known methods of synthesis, Williamson's[1] reaction is well known. This reaction has several undesirable features and is mostly of theoretical interest only.

Many other methods of preparation have been proposed since and a few of these will be mentioned. Zeltner and Tarassoff[2] prepared isoamyl ether in 25 per cent yield from sym. dibrom dimethyl ether and isobutyl bromide by the Grignard reaction. Normal amyl ether was prepared by Blaise and Picard[3] from amy iodide and silver oxide. Schroetter and Sondag[4] prepared ethers from the corresponding alcohols using methionic acid as the dehydrating catalyst. In 1852 Williamson[5] reported the preparation of some lower aliphatic ethers from the alcohols using sulfuric acid as the etherification agent. Balard[6] claimed to have used this method successfully in the synthesis of diisoamyl ether. Norton and Prescott[7] disputed the success of the sulphuric acid process and claimed to have obtained only a tar when trying to convert isoamyl alcohol to the ether. A study of the dehydration of alcohols to ethers by means of sulfuric acid was made by Popelier[8]. He reported physical constants of a variety of aliphatic ethers made by him.

In 1921 Hultman, Davis, and Clarke[9] devised a very simple automatic liquid separator which they found useful in a variety of reactions where it was desired to remove water formed by the reaction. With this apparatus they obtained a 60 per cent yield of normal butyl ether from butyl alcohol, using sulfuric acid as a catalyst. The generality of their process in other ether preparations was not reported. Of the known methods of ether synthesis reported in the literature, it was decided to investigate the method of Hultman, Davis, and Clark[9] using the continuous separator.

[1] Ann., **77**:37. (1851).
[2] Ber., **43**:941. (1910).
[3] Ann. chim. phys., 8, **25**:260. (1912).
[4] Ber., **41**. 1921 (1908).
[5] Ann., **81**:73. (1852).
[6] Ann. chim. phys., 3, **12**:294. (1844).
[7] Am. Chem. J., **6**:241. (1884).
[8] Bull. soc. chim. Belg., **32**:179-194. (1923).
[9] J. Am. Chem. Soc., **43**:366. (1921).

"Proc. Ind. Acad. Sci., vol. 42, 1932 (1933)."

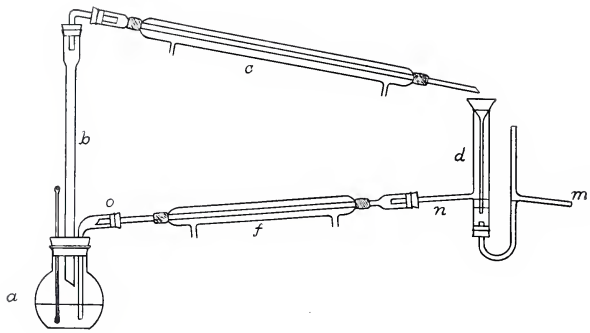

FIGURE 1

PROCEDURE

We have adopted the following procedure and have found it satisfactory for the synthesis of n-butyl ether, n-amyl ether, and isoamyl ether from the corresponding alcohols:

Two mols of the alcohol, previously dried over lime and distilled, were placed in a 600 ml., wide mouth, Florence flask (a in Fig. 1) and 15-20 g. of pure conc. sulfuric acid slowly added. The flask was equipped with a glass delivery tube (b), and a thermometer and adapter (o) both extending into the liquid. The flask and contents were carefully heated over a sand bath. The mixed vapors were carried through the lagged tube (b), condensed in the watercooled condenser (c) and run into the separator (d). Here the condensate separated into two layers. The aqueous layer was automatically removed through the side tube (m) while the ether-alcohol layer was allowed to run back into the reaction flask (a) through the side tube (n), the water-cooled condenser (f) and the adapter (o). In the reaction flask the following reactions take place:

$$\mathrm{ROH} + \begin{matrix}\mathrm{HO}\\ \mathrm{HO}\end{matrix}{>}\mathrm{SO_2} \longrightarrow \begin{matrix}\mathrm{RO}\\ \mathrm{HO}\end{matrix}{>}\mathrm{SO_2} + \mathrm{H_2O}$$

$$\begin{matrix}\mathrm{RO}\\ \mathrm{HO}\end{matrix}{>}\mathrm{SO_2} + \mathrm{ROH} \longrightarrow \begin{matrix}\mathrm{HO}\\ \mathrm{HO}\end{matrix}{>}\mathrm{SO_2} + \mathrm{ROR}$$

After heating for about one hour a second 15 g. of sulfuric acid was added to the reaction mixture and a third 15 g. portion after heating about two hours.

When the temperature of the reacting mixture had reached a point approximately midway between the boiling point of the alcohol and the ether, the reaction was stopped, the flask disconnected from the apparatus, and the contents thoroughly cooled. About 150-200 ml. of water was added and the mixture transferred to a separatory funnel. The ether layer separated in 10-20 minutes. This was removed, washed once with water, and then three times with 20 per cent sodium hydroxide solution, and finally with 75-100 ml. of water. The washed ether was dried over calcium chloride and distilled, a 20° fraction collected. This fraction was washed again with sodium hydroxide solution, dried over

calcium chloride, and then fractionated. A Snyder three-ball column or an 18″ Vigreux column was used in the final distillation. A fraction boiling within plus or minus one degree of the true boiling point was collected. Yields were 40-65 per cent of the theoretical.

The ethers prepared in this way and their physical constants are shown in Table I.

TABLE I

Ether	Formula	B. P.	n_D^{21}
n-butyl	$(CH_3—CH_2—CH_2—CH_2)_2O$	139-140 745 m.m.	1.4050
n-amyl	$(CH_3—CH_2—CH_2—CH_2—CH_2)_2O$	180-183 738 mm.	1.4175
isoamyl	$((CH_3)_2—CH—CH_2—CH_2)_2O$	170-172 744 mm.	1.4151

DISCUSSION

Popelier[8] records the boiling point of n-amyl ether as 187.9°. The International Critical Tables give the value as 190°. Other values ranging from 169° up are recorded in the literature. The n-amyl ether prepared by the method just described had a boiling point of 180°-183°, a disagreement with any previously reported values. It is possible that the n-amyl alcohol used in the preparation contained impurities which caused the formation of a constant boiling ether mixture.

This work is being continued to extend further the applicability of the process, to investigate other practical etherification catalysts, and to redetermine the physical constants of the higher aliphatic ethers. These results will be published later.

The authors wish to acknowledge and thank Messrs. M. E. Crawford and T. J. Tarasovic for their assistance in carrying out the experiments.