Physiological Apparatus.

Frank Marion Andrews.

Introduction.

It is frequently the case that much of the apparatus required to carry on work properly in Plant Physiology is so expensive that for any one laboratory to possess all that is needed is quite out of the question. This has led me to plan and have constructed a few very desirable pieces, concerning which this paper makes mention. I am aware of the fact that no lack of contrivances have been made to illustrate some of the principles here set forth. However, for simplicity of construction and perfect adaptation to the purposes for which they were intended, they will certainly be found superior in many ways and useful by any one interested or engaged in physiological work where such apparatus would be involved. It has therefore occurred to me to describe the various pieces of apparatus as concisely as possible and present them, together with the illustrations, in the following brief account:

I. Heating Stage for the Microscope.

This piece of apparatus consists of a rectangular sheet of copper, 60 cm. long, 8 cm. wide and 2 mm. thick. Figure 1 shows a view of the lower side. It will be seen from this view that the copper does not rest directly on the stage of the microscope but is held away from it a distance of 1 cm. This is accomplished by a strong frame of wood B,

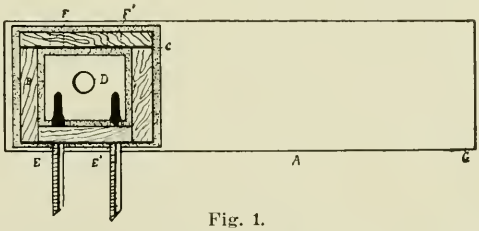

Fig. 1.

7 cm. square and 8 mm. in height. Between the wood and the copper, as an extra preventive against the conduction of heat in long continued experiments, a layer of asbestos 2 mm. thick is interposed at C. The

frame of wood and asbestos is fastened firmly to the copper A by copper screws, which, however, must not reach through the wood B. In the center of the wood and asbestos squares is a circular opening D, 12 mm. in diameter, to allow the light reflected through the stage of the microscope to pass through the slide. Through the side of the wood frame away from the pillar of the microscope, as the heating stage lies in the proper position on the stage of the microscope for observation, are two holes for centigrade thermometers, E and E^1. The temperature at E may be a little less than at E^1, and if this is the case, then an average of the temperatures shown by the thermometers at E and E^1 should be reckoned. It should be ascertained before the experiment that the two thermometers read the same at the same temperature. As they project directly in front during correct observation, the temperature of both is easily seen while experimenting. Since it is not always possible or convenient to carry on experiments with the copper plate of the heating stage directed to the right as would necessarily be the case with the thermometers on the side shown in Figure 1, another arrangement was resorted to. On the side of the wood frame opposite E and E^1 are two similar holes for thermometers, F and F^1, which allows observation while the copper plate of the heating stage is turned to the left or the reverse position to the one in which E and E^1 could be used. It will be seen from the lower view of the heating stage shown in Figure 1 that the bulbs of the thermometers rest against the copper plate inside the asbestos square C, and in this way the heat is readily conveyed to them. One thermometer only might be used, but the use of two is more accurate and therefore advisable. A third position for the heating stage is possible and for various reasons sometimes advisable, in which the copper plate A is directed away from the observer instead of from the left or right. Or it may be turned about on the stage of the microscope through an angle of somewhat more than 180° and still be capable of perfect use at every point. It is held to the stage of the microscope by means of iron clamps, the upper screw of which is provided on its lower end with a small wooden block covered with asbestos. This is necessary since a careless disregard or misuse of subtances that are not poor conductors of heat may readily result in injury to the microscope. Heat may be supplied by a gas or alcohol lamp or other source placed under A at G and the flame increased or moved toward C as is desired.

II. Temperature Box.

This temperature box is made of galvanized iron. It is 25 cm. long, 9 cm. wide and 3 cm. deep, all inside measures. It is held to the stage of the microscope by means of a curved iron clamp hooked over the edge of the box at A. Near the lower side B is a rectangular slit 4 cm. wide and 4 mm. high, extending entirely across the box for the reception of a slide carrying the object for observation. By noticing Fig. 2 it will be

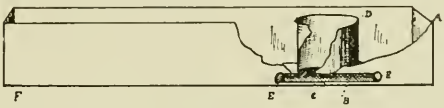

Fig. 2.

seen that the slit, B, is elevated about 2 mm. above the bottom of the box as at C, thus allowing the hot or cold water used to flow under and all around the space occupied by the slide. By this means the temperature may be increased or decreased as desired, in B to the most perfect state of efficiency possible in such a simple contrivance. At D is a cylindrical tube 3 cm. high and 2.5 cm. in diameter for the reception of the objective. In Fig. 2 both the tube D and the side of the box toward the observer are cut partly away to show the interior. The top is provided with a lid. By means of a proper mixture of salt and ice it is possible to reduce the temperature in the slit B, as shown by the thermometers kept constantly in the spaces E and E^1, to zero centigrade or below. If, however, a high temperature is desired, this may be accomplished by placing a flame under the end of the box F which projects over the stage of the microscope. Or one may arrange a vessel, somewhat higher than the box on the stage of the microscope, and by placing a lamp under this vessel, which is nearly filled with water, easily heat it to any desired temperature as shown by a thermometer. This heated water could then be siphoned into the box A and out again, and in this way the desired temperature in B obtained. The inflow and outflow to A can easily be regulated and made uniform by opening or closing pinch-cocks fastened on the rubber tube. Injury to the microscope is prevented by a sheet of asbestos placed on the stage. This temperature box can be turned either to the right or left or turned and used in any angle of 180° or less.

III. Centrifuge.

This consists of a wooden frame 60 cm. long, 55 cm. wide, and varying in height from 30 cm. at the lowest point at A to 60 cm. at B. Fig. 3 gives a view of the apparatus as seen in vertical median longitudinal

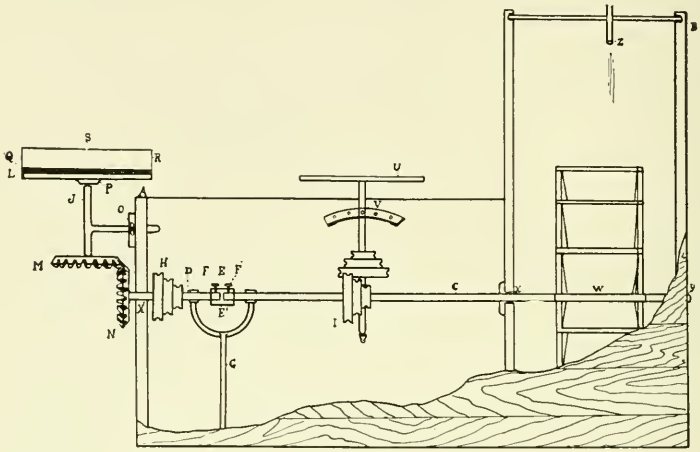

Fig. 3.

section. This apparatus in part resembles the centrifuge figured by Detmer, but is larger and possesses many improvements over his apparatus (Detmer Pflanzenphysiologie Zweite Auflage, 1895, p. 384). The machinery consists of a brass shaft 70 cm. long, in two sections C and D, which at E may be connected or disconnected by tightening or loosening the clamp E^1 by screws F F^1. In this way part or all of the machinery may be run at one time, which is often desirable. The ends of the shaft are held by a support G near E, and on D is a cone-pulley H by means of which it may be driven by other power if so desired, or from which power may be taken for other purposes if the cone-pulley I on C is in use. On the end of the shaft D is a bevel-gear arrangement so that motion is transmitted at right angles to D in the shaft in J which carries the disk L. By exchanging the position of M and N a faster motion of L may be obtained, with no increase in the speed of D. Again by using a still larger cog at N and a smaller cog at M, any speed desired may be had. By a vice versa arrangement of cogs a very slow rotation of L is effected. It is of course to be understood that by varying the size of the cogs M

and N, the distance of J from N must also vary in two obvious directions. This is done by the screw O (Figs. 3 and 4), which holds the support of the shaft carrying L. The shaft carrying the disk is enclosed for the sake of firmness in a sheath J. It is fastened to a disk of iron P. (Figs. 3 and 4), and this is held to the wooden disk of pine L, which is 20 cm. in diameter and 2 cm. thick, by means of screws. Larger disks of wood can, by means of these screws, be substituted for L and therefore the centrifugal force considerably increased aside from the ways of increasing the speed by the cone-pulley and bevel-gear arrangement above referred to. The centrifugal force brought to bear on the objects under investigation may also be increased by being placed near the periphery of the disk L, or decreased by moving them nearer the center of L. The disk of wood must in all cases be first boiled thoroughly in paraffine to prevent swelling. The disk of wood L is covered by a circular sheet of cork Q. This serves for the attachment of seedlings and plant parts to be centrifuged, and to it also are fastened several layers of wet filter paper for keeping the seeds moist. A glass crystallizing disk R, which will exactly fit L, is placed over it and darkened by being painted thickly on the inside with black paint. R is held to L by clamps. In order to water the seedlings when the machine is run for a long time, a hole is bored exactly in the center of the crystallizing disk R as at S, and even while the disk is revolving water may be forced in against the filter paper on the sheet of cork Q, and in this way be carried by absorption to all the seeds on the disk Q. Fig. 3 shows the disk ready to rotate in a horizontal direction. Fig. 4 shows the end view of the frame at A and

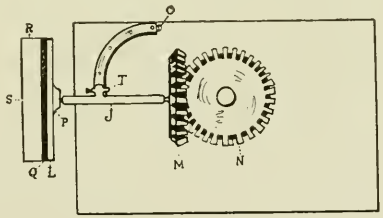

Fig. 4.

indicates how the disk may be rotated not only horizontally but vertically as well, or at any angle between the two by changing the position of the shaft in J by loosening and moving the clamp at T. This machine is also strong enough to carry any small flower pots with growing seedlings,

at any angle and at rapid speeds by using clamps to hold them in position.

As stated by Detmer, seedlings of the proper size when fastened on Q and rotated rapidly curve outwards. I have noticed a curving against the direction of motion in seedlings subjected by a stronger centrifugal machine than this exerting 4,400 gravities.

At U (Fig. 3) is another similarly arranged disk in case it is desired to run two at once at different angles. Here, however, the power is transmitted by a belt and cone pulleys, by means of which different speeds may be obtained. U may also be inclined at an angle by loosening or tightening V. At X, X^1 and Y the shaft is supported in journals. At W is a water wheel 50 cm. in diameter, and by using a very strong stream of water Z, a very high speed and ample power for the experiments here mentioned may be developed. Naturally the speed and power can be easily controlled by the force of the stream of water. By means of the cone-pulleys the machine may be driven by motor or other power.

IV. Apparatus for Growing Plants in Different Colored Lights.

This consists of a wooden box made perfectly tight to prevent the light from entering except at H, Fig. 6. It is 40 cm. long, 25 cm. wide and 25 cm. deep. Of course it is often advisable to use larger sizes of boxes, but the one here mentioned will serve as an illustration. The inside of the box is painted black and is provided with a base for holding

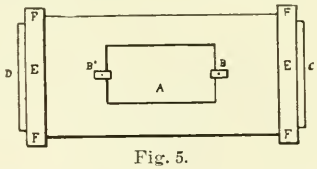

Fig. 5.

flower pots in any position. Each side of the box is provided with a door A, Fig. 5, which by means of the clamps B and B^1 may be removed so that the plant inside may be adjusted in the desired position, as regards the light entering at C or D, and measurements taken. The ends of the box are in the form of caps E (Fig. 5) which lap over the end at F so tightly that no light can enter.

Fig. 6 shows an end view of one of the caps E. In this figure there will be noticed a circular opening H, 15 cm. in diameter in the

center of the cap. Around H is a three-sided wooden frame I, on whose inner edge is a groove J, deep enough to receive one pane of glass. The

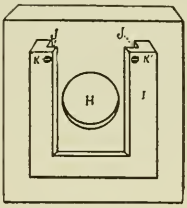

Fig. 6.

pane of glass used is 20 cm. square and must have exactly parallel surfaces. Light of any desired color may enter the box at H by putting in the groove J a glass plate which has been colored in the following way. To a 10 per cent. solution of gelatin add about .25 of a gram of the ordinary "Diamond Dye" of the color desired, while the gelatin is still hot and in solution. Stir well for a few minutes. Now place one of the glass plates in a perfectly horizontal position in a cool place and pour onto it a thin layer of the colored liquid gelatin. Let stand till the gelatin is solid. In this way colored plates of red, orange, green, blue or any other color or shade of color may be obtained. These colors have the additional advantage of being permanent. The screws K and K^1 hold the plates in the correct position in J. By having a number of colored plates any color in the box may be obtained by putting the plate of the desired color in J.

V. Photometer.

A simple form of photometer is shown in Fig. 7. It consists of a wooden base A, 110 cm. long and 25 cm. wide, on which stands a rectangular box B, 81 cm. long, 17.5 cm. wide, and 22 cm. high. This box B is

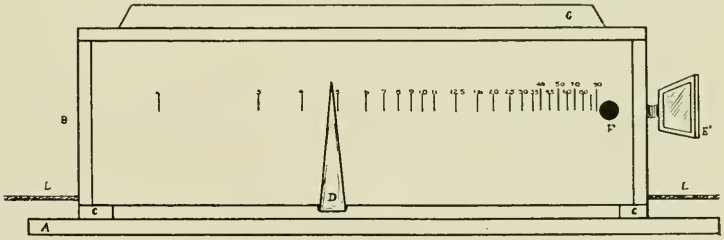

Fig. 7.

raised 1 cm. from A by a block of wood under each of the four corners as at C to allow the to-and-fro motion of the pointer D. The longitudinal opening under G and the base of D give ventilation. The figures on the side of B are accurately placed on the original apparatus and show the intensity of light in Hefner meter units. At E^1 is a mirror and at F a circular opening to a mirror inside. The interior view is shown in Fig. 8. Here A is the wooden base, C the wooden block supporting the box B. L and L^1 are strings by means of which the Hefner-Altneck amyl-acetate lamp is regulated in distances from the membrane K. This membrane consists simply of a circular piece of filter paper covering an opening in the center of the end of the box 7.5 cm. in diameter. In the center of the filter paper is a circular spot about three cm. in diameter, as in the ordinary Bunsen photometer. Each mirror E E^1 is 5 cm. long and 4 cm. wide and is inclined at an angle of about 45° to the filter paper membrane

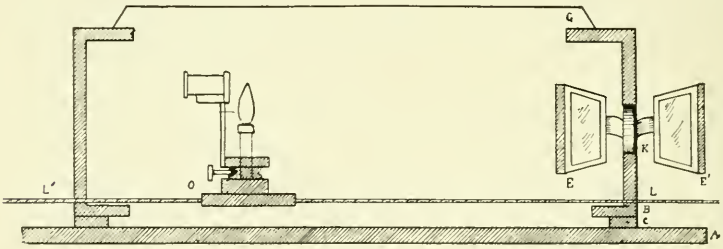

Fig. 8.

by means of the galvanized iron frame which supports it. The V-shaped top G is also composed of galvanized iron. This apparatus will show the intensity of light from 2 to 90 Hefner meter units. When it is desired to test the intensity of light between two and ninety Hefner units, draw the pointer D, opposite which inside the box the Hefner-Altneck amyl-acetate lamp is placed, by the string L towards the filter paper membrane. When the circular spot of paraffine on the filter paper almost disappears, then the light cast on the filter paper screen by the amyl-acetate lamp, and that in the room for example outside are equal. Noticing now the position of the pointer D, we notice that it points to or near some figure on the outside of the box. The number it points to indicates the intensity of light in Hefner meter units.

VI. Rheostat.

This piece of apparatus (Fig. 9) is 35 cm. long, 30 cm. high, and 15 cm. wide. It has a wooden frame A, over which the wire B is tightly stretched, the two sides being connected by the wire Q. The voltage, which, as here used, was a constant one, enters at M through the binding posts E E^1, and from this it passes through the wire B in the direction indicated by the arrow. The wire used was iron number 20 and in all 100 meters

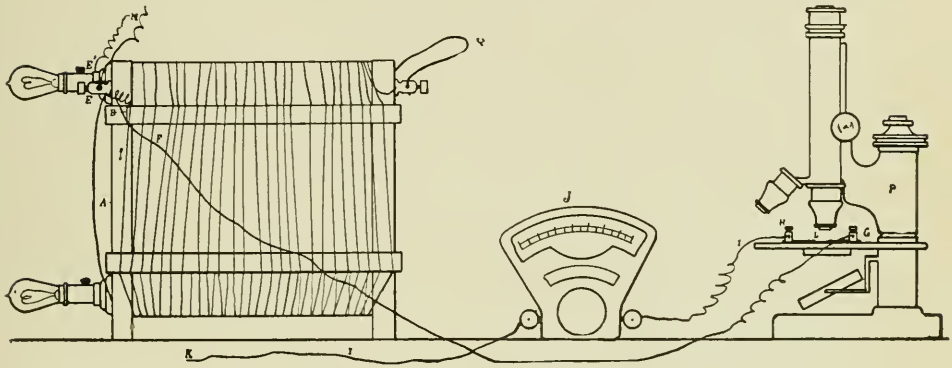

Fig. 9.

were used in making this machine to obtain if needed a high resistance so that by means of shunting any strength of current may be obtained. If an insulated wire F is connected with one post on an electric slide as at G, and the other post of this electric slide is joined to another insulated wire I, about the center of which is interpolated a milli-ampere meter J; then by shunting with the free end K of the wire I to the non-insulated wires B, an electric current if sufficiently strong will pass through a specimen laid on the slide at L under the microscope P. If at first the current at B is not strong enough, the free end of the wire K can be moved from B in the direction of the arrow till a current of the desired strength is obtained. The strength of the current will be registered by the meter J. In the experiment I tried, with 110 volts entering at E E^1, a current of .7 of a milli-ampere was sufficient to cause the movement in the protoplasm in Elodea cells to cease. It began again in 20 minutes. The lamps

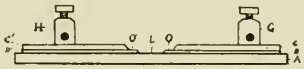

Fig. 10.

may be used in the circuit in series to increase the resistance. Fig. 10 gives a view of a median vertical longitudinal section of the slide. It consists simply of a thick glass slide A, on which is a heavy layer of tin-foil B B^1, and on this a plate of copper C C^1, through which the binding posts G and H are screwed. This not only fastens B B^1 and C C^1 together, but fastens them to the glass slide A. The specimen is laid at L with its ends touching the ends of the tin-foil B B^1, on which the cover glass rests at OO^1.