Factors Affecting the Operation of a TSEE Proportional Counter

D. J. Fehringer, R. J. Vetter, and P. L. Ziemer
School of Pharmacy and Pharmacal Sciences
Purdue University, West Lafayette, Indiana 47907

Introduction

Exoelectron emission is the emission of low energy electrons from the surfaces of ionic crystals, metals, semiconductors, and some organic materials, either during or following various physical or chemical treatments including exposure to ionizing radiation. Electrons may be emitted spontaneously or upon stimulation of the material with heat or light. Exoelectron emission stimulated by heating the material is termed thermally stimulated exoelectron emission (TSEE), and shows emission maxima at distinct temperatures thought to be characteristic of the energy levels of electron traps in the investigated material.

Measurement of TSEE for radiation dosimetry is often accomplished using windowless gas-flow radiation detectors operated in either the Geiger-Mueller (G-M) or the proportional region. The number of photo-electrons produced in the detector is dependent on a number of factors including the applied voltage, the electrode configuration, and the type and pressure of the filling gas (6). The probability of an electron within a detector producing an ionization when it collides with a gas molecule is dependent on the ionization potential of the molecule and the energy of the electron. The energy acquired by an electron between collisions depends on the electric field intensity through which it is accelerated and on the mean free path between collisions, or the molecular density of the gas. Electrons gain larger amounts of energy between collisions when the electric field intensity is increased or when the gas pressure is decreased (increasing the mean free path between collisions). Therefore, increasing the electric field intensity or decreasing the pressure of the filling gas will increase the probability of secondary electron production at each collision, and will increase the gas multiplication factor. Fenyves and Haiman (4) indicate that the multiplication factor increases approximately exponentially with increasing electric field strength, and decreases exponentially with increasing pressure of the filling gas.

In addition to an effect on the output pulse size, the magnitude of the voltage applied to a proportional counter anode would be expected to significantly influence the efficiency with which exoelectrons are drawn into the sensitive volume of the proportional counter where electron multiplication occurs. The electric field intensity near the walls of a proportional counter is relatively low and will not strongly accelerate free electrons toward the center of the detector. It is possible, therefore, for exoelectrons to diffuse to the walls of the detector and be lost before producing a discharge. Increasing the detector voltage will increase the electric field intensity throughout the detector volume and will decrease the tendency for exoelectons to be lost in this manner. Niewiadomski (5) reported that making the TSEE sample electrically negative

with respect to the detector walls helped accelerate the emitted electrons into the detector volume and provided a four-fold increase in the TSEE detection efficiency.

The objective of this study was to measure the influence of three major factors—the type of counting gas, the type and position of the detector anode, and the electrical potential of the TSEE sample—on the operation of the proportional counter for TSEE measurements.

Methods and Materials

The TSEE reader used for this study consisted of a windowless gas flow proportional counter with associated electronic instrumentation (Figure 1). The proportional counter was modified so as to accept a sliding drawer which contained the TSEE dosimeter, a heater, and thermocouples. A temperature programmer[1] was used to provide a linear heating rate of approximately 50°C/minute, and was controlled by a feedback signal from one of the thermocouples. The other thermocouple was used to monitor the heating rate during readout.

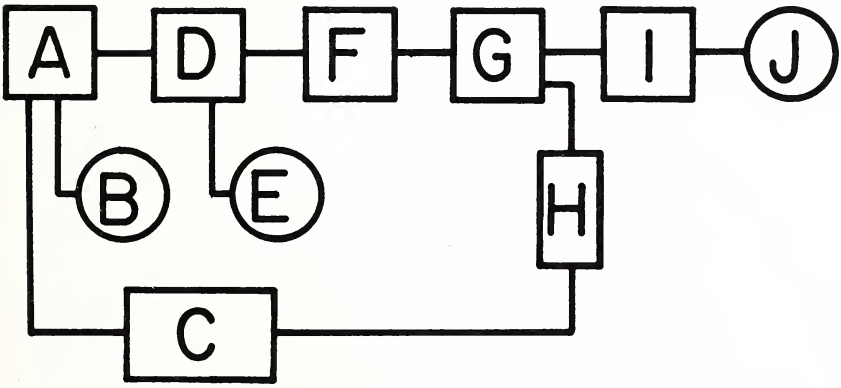

FIGURE 1. *Block diagram of TSEE measurement system. A, proportional counter-heater; B, temperature programmer; C, strip chart recorder; D, preamplifier; E, power supply; F, amplifier; G, single channel analyzer; H, count rate to voltage converter; I, scaler; J, timer.*

Pulses from the proportional counter were processed by commercially available modular equipment[2] consisting of a low-noise preamplifier operated with gain setting X1, a linear amplifier operated with gain setting X150, a single-channel analyzer and a scaler to obtain the integrated output. A count rate-to-voltage converter of the diode pump type was constructed which produced a D.C. voltage proportional to the TSEE count rate (1). This converter permitted simultaneous recording of the TSEE "glow curve" and the heater temperature on a dual pen strip chart recorder.

[1]Varian Instrument Co., Palo Alto, CA.
[2]Models 109 PC, 451, 406 A and 430, Ortec Incorporated, Oak Ridge, TN.

A previous study of proportional counter operation (3) indicated that a 90% argon—10% methane counting gas (P-10 gas) did not provide adequate gas multiplication for TSEE counting applications, and that substitution of pure methane would improve the gas gain of the detector. This substitution of pure methane would improve the gas gain of the detector. This substitution was made and the operating characteristics, including pulse height distributions and "characteristic curve" measurements were investigated.

Brown (2) reported that the type, shape and location of the anode within the detector significantly influenced the stability and detection efficiency of a proportional counter for TSEE measurements. In particular, he found that a needle-point anode provided more stable operation than the conventional loop anode. In our investigation several anodes of both the loop and the needle-point types were fabricated and the operating characteristics were recorded.

In order to determine the influence of the electrical potential of the sample on the TSEE detection efficiency, the TSEE reader was modified so that the sample was insulated from ground potential, and a voltage was then applied to the sample using an external power supply. The TSEE detection efficiency was then determined by comparing the observed count rates at various potentials to that observed with the sample grounded, both for isothermal fading and during a normal TSEE readout cycle.

Results and Discussion

The use of pure methane rather than an argon—methane mixture as the counting gas improved the proportional counter operation for TSEE detection, although the counter operation was still not entirely satisfactory. The pulse height distributions obtained from an isothermally fading TSEE source for pure methane and for a 90% argon—10% methane counting gas mixture are presented in Figure 2. Each curve was obtained at the highest voltage that would allow reasonably stable detector operation without transition to Geiger or multiple counting operation. Corresponding plots of count rates versus voltage, or "characteristic curves" are displayed in Figure 3.

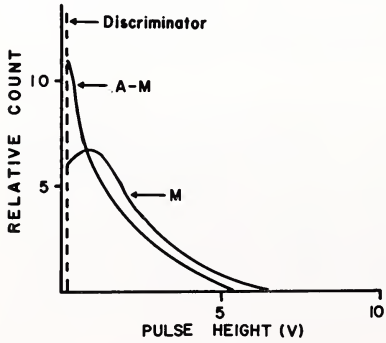

FIGURE 2. *Pulse height distributions for pure methane at 4500 volts (M) and argon-methane at 2250 volts (A-M).*

The curves of Figures 2 and 3 were found to be highly variable on a day-to-day basis, as illustrated in Figure 4. Below 4100 volts, however, little variation in the characteristic curve was found, and, although it did not provide the

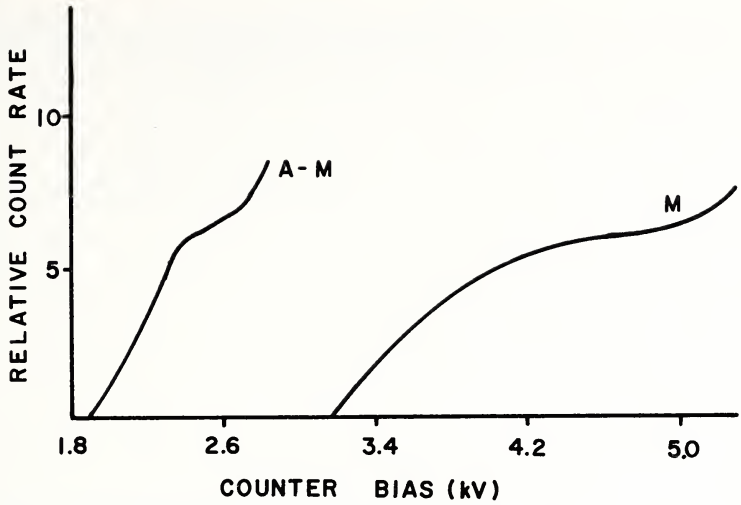

FIGURE 3. *Count rate versus voltage curves for argon-methane (A-M) and pure methane (M).*

maximum detection efficiency, 4000 volts was chosen as the working voltage in order to optimize the day-to-day reproducibility of the proportional counter. Variations in the characteristic curve were correlated with variations in the atmospheric pressure (pressure of the filling gas) as shown in Figure 4. It is suggested that decreases in the gas pressure favor transition to the Geiger counting mode, and that the resulting large increases in the dead time of the detector were responsible for the decreased count rates observed at higher voltages. At higher pressures the absence of a "counting plateau" is attributed to an increased tendency for the electrons to be collected into the sensitive volume of the detector as the voltage is increased. The observed increase in the count rate with increasing voltage was therefore due to an increase in the efficiency with which electrons were drawn into the detector volume before diffusing to the detector walls where they would otherwise have been lost.

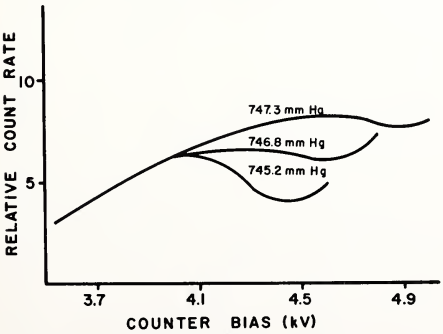

FIGURE 4. *Variation of count rate with voltage as affected by day-to-day variations in barometric pressure.*

It was noted that use of pure methane as the counting gas appeared to increase the TSEE detection efficiency compared to the argon-methane gas. It

could not be determined, however, if this increase was due to an improved counting efficiency, or if the higher detector bias required for methane operation resulted in an increased exoelectron "collection efficiency" as discussed above.

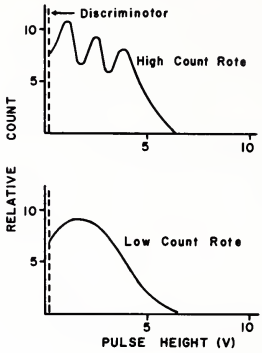

FIGURE 5. *Variation of pulse height distributions with TSEE count rate.*

The pulse height distributions for both counting gases were found to exhibit a marked count rate dependence as illustrated in Figure 5. Higher count rates caused a shift of the pulse height distribution to larger pulse heights and the growth of additional peaks in the curve.

Attix (1) reported that use of an argon-methane counting gas for TSEE detection resulted in large numbers of "spurious" counts, and that substitution of methane eliminated this problem. Our investigation confirmed the existence of these spurious pulses, with bursts of hundreds of counts spontaneously appearing, especially at higher temperatures during a readout cycle. Substitution of methane as the counting gas did not entirely eliminate this problem, but it did reduce the frequency of occurrence of these spurious pulses to an acceptably low level. It was also observed that the frequency of occurrence and the number of counts per burst both decreased during the course of a day's readout work. If the detector was not used for several days, however, the problem of spurious pulses was found to be considerably increased when work was resumed. It therefore appears that this effect may have been caused by water vapor or other atmospheric contaminants collected inside the detector while not in use.

Brown (2) reported that substitution of a needle-point anode in place of the normal loop anode eliminated the spurious counting problem in his TSEE proportional counter. In our investigation, several platinum needle-point anodes of varying lengths were fabricated, and their operation was compared with that of a loop anode in both methane and argon-methane counting gases. None was found to outperform the loop anode in any way, including reduction of spurious counting. Measurements of pulse height distributions and characteristic curves indicated that the needle-point anodes operated in the proportional mode over a more limited voltage range and showed a sharper transition to Geiger operation than did the loop anode. The needle-point anodes were therefore discarded.

A loop anode of approximately twice the diameter of the standard anode

was obtained, and its performance was measured. When installed, the bottom of this anode was only about 8 mm from the TSEE emitting surface, and it was thought that the increased electric field in the vicinity of the sample surface would improve the exoelectron "collection efficiency." The TSEE characteristic curve for this anode at room temperature exhibited a very attractive counting plateau extending over several hundred volts, but at higher temperatures an extremely high thermionic emission was found. It was thought that the increased electric field at the sample surface lowered the work function slightly resulting in the greatly increased thermionic emission. This anode was therefore also judged to be unsuitable, and the standard loop anode at a height of 25 mm above the sample was used for all subsequent investigations.

The TSEE reader was modified so that an external power supply could be attached to the sample, biasing it at any desired potential with respect to ground. The infuence of the sample potential on the TSEE detection efficiency for an isothermally fading TSEE source was measured and the results are presented graphically in Figure 6. A negative sample potential was found to greatly increase the TSEE detection efficiency. At higher temperatures, however, it was found that a negative sample potential resulted in a very strong thermionic emission which largely obscurred any accompanying TSEE. Application of a negative bias to the sample was therefore judged to be an unacceptable method for improving the TSEE detection efficiency.

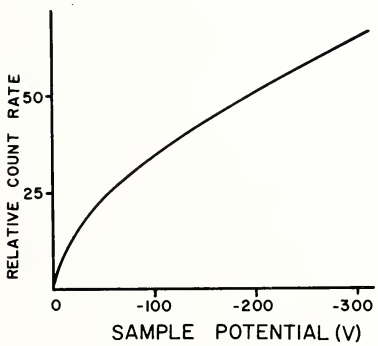

FIGURE 6. *Variation of TSEE detection efficiency with electrical potential of sample.*

Conclusions

This study showed that use of pure methane as the counting gas in the TSEE proportional counter resulted in better counter stability and higher gas gain than the argon-methane counting gas. The standard loop anode positioned 25 mm above the sample gave better performance than needle-point on large-loop anodes. Detection efficiency was increased when a negative bias was applied to the sample, but thermionic emission was increased when ambient temperature was high. Although the operation of the detector was still not entirely satisfactory, it is suspected that additional investigations of the geometrical configuration of the detector and improvements in the associated electronic components could increase the TSEE detection efficiency and detector stability.

Literature Cited

1. ATTIX, F. H. 1971 A proportional counter for thermally-stimulated exoelectrons. Int. J. Appl. Radiat. Isotopes **22**:185-197.
2. BROWN, L. D. 1971. Problems in the use of proportional counters for TSEE measurements. Proceedings of Third International Conference on Luminescence Dosimetry. Danish Atomic Energy Commission. Copenhagen. Riso Report No. 249. 654-659. 1229 p.
3. FEHRINGER, D. J. 1973. The Effects of Microwave Radiation on Thermally Stimulated Exoelectron Emission. M.S. Thesis. Purdue University. 94 p.
4. FENYVES, E., and O. HAIMAN. 1969. The Physical Principles of Nuclear Radiation Measurements. Academic Press. New York. 500 p.
5. NIEWIADOMSKI, T. 1971. TSEE dosimetry studies. Proceedings of the Third International Conference on Luminescence Dosimetry. Danish Atomic Energy Commission. Copenhagen. Riso Report No. 249. 612-617. 1229 p.
6. PRICE, W. J. 1964. Nuclear Radiation Detection. McGraw-Hill, New York. 430 p.